© GRIMM AND PARKER, P.C. 2014

NOTES:
1. DEVICES SHALL BE INSTALLED ON A COMMON VERTICAL LINE WHEREVER POSSIBLE.
2. REFER TO THE PROPER DEVICE INSTALLATION INSTRUCTIONS FOR BACKBOX MOUNTING HEIGHTS.
3. COORDINATE WITH ARCHITECT TO VERIFY ALL PROJECT SPECIFIC STANDARD DEVICE MOUNTING HEIGHTS PRIOR TO INSTALLATION. ARCHITECTURAL DRAWINGS TO TAKE PRECEDENCE OVER THE MOUNTING HEIGHTS LISTED IN THIS DETAIL.

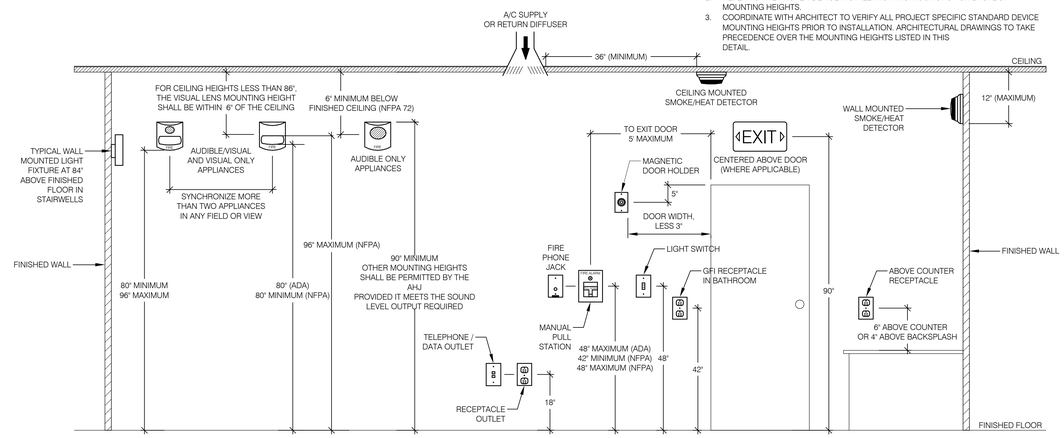

2 / E-7.1 TYPICAL DEVICE MOUNTING HEIGHTS DETAIL

SCALE: NOT TO SCALE

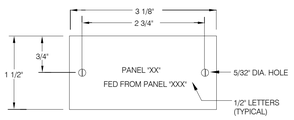

NOTES:
1. REFER TO SPECIFICATIONS FOR ADDITIONAL NAMEPLATE REQUIREMENTS.
2. NAMEPLATE TO BE 1/16" THICK WHITE PLASTIC WITH BLACK CENTER LAMINATION. FACE SHALL BE WHITE, ENGRAVED LETTERS SHALL BE BLACK.
3. SECURE NAMEPLATE TO SURFACES WITH (2) FLAT HEAD BRASS SCREWS. ADHESIVE CEMENT SHALL NOT BE ALLOWED.

3 / E-7.1 NAME PLATE DETAIL

SCALE: NOT TO SCALE

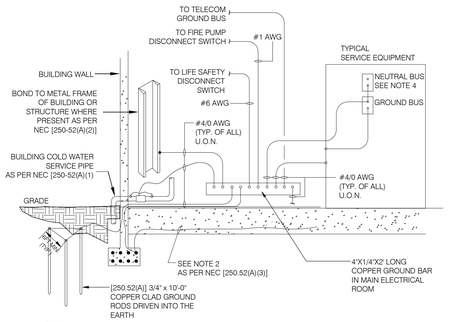

NOTES:
1. PROVIDE EXOTHERMIC WELDED CONNECTIONS BELOW GROUND.
2. A CONCRETE ENCASED ELECTRODE "Ufer" TO BE USED AS THE PRINCIPLE GROUNDING ELEMENT. A CONCRETE ENCASED ELECTRODE IS AN ELECTRODE ENCASED BY AT LEAST 2 INCHES CONCRETE LOCATED WITHIN AND NEAR THE BOTTOM OF A CONCRETE FOUNDATION OR FOOTING THAT IS IN DIRECT CONTACT WITH THE EARTH, CONSISTING OF AT LEAST 20 FEET OF ONE OR MORE STEEL REINFORCING BARS OR RODS OF NOT LESS THAN 1/2 INCH DIAMETER, OR CONSISTING AT LEAST 20 FEET OF BARE SOLID COPPER CONDUCTOR NOT SMALLER THAN NO. 4 AWG [250.52(A)(3)]. STEEL REINFORCING RODS AND/OR COPPER CONDUCTORS UTILIZED IN THE INSTALLATION REQUIRE A MINIMUM OF 2 FEET OF ACCESIBLE LENGTH AFTER INSTALLATION [250.50].
3. FURNISH AND INSTALL ADDITIONAL GROUND RODS AS REQUIRED TO ACHIEVE 5 OHMS OR LESS RESISTANCE.
4. SERVICE SWITCH NEUTRAL BUS SHALL BE BONDED TO THE GROUND BUS.

4 / E-7.1 ELECTRICAL SERVICE GROUNDING DETAIL

SCALE: NOT TO SCALE

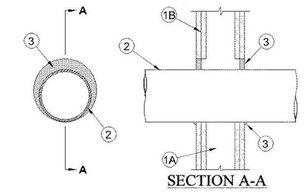

GYPSUM WALLBOARD

F RATINGS - 1 AND 2 HR
T RATING - 0 HR

L RATING AT AMBIENT - LESS THAN 1 CFM SQ FT

L RATING AT 400 F. LESS THAN 1 CFM SQ FT

NOTES:

1. WALL ASSEMBLY - THE FIRE-RATED GYPSUM WALLBOARD/STUD WALL ASSEMBLY SHALL BE CONSTRUCTED OF THE MATERIALS AND IN THE MANNER SPECIFIED IN THE INDIVIDUAL U300 OR U400 SERIES WALL AND PARTITION DESIGNS IN THE UL FIRE RESISTANCE DIRECTORY AND SHALL INCLUDE THE FOLLOWING CONSTRUCTION FEATURES:
A. STUDS - WALL FRAMING MAY CONSIST OF EITHER WOOD STUDS OR STEEL CHANNEL STUDS. WOOD STUDS TO CONSIST OF NOM 2 BY 4 IN. LUMBER SPACED 16 IN. CC. STEEL STUDS TO BE MIN 3-5/8 IN. WIDE AND SPACED MAX 24 IN. OC.
B. GYPSUM BOARD* - THICKNESS, TYPE, NUMBER OF LAYERS AND FASTENERS AS REQUIRED IN THE INDIVIDUAL WALL AND PARTITION DESIGN. MAX DIAM OF OPENING IN WOOD STUD WALLS IS 8 IN. MAX DIAM OF OPENING IN STEEL STUD WALLS IS 14 IN.
THE HOURLY F RATING OF THE FIRESTOP SYSTEM IS EQUAL TO THE HOURLY FIRE RATING OF THE WALL ASSEMBLY IN WHICH IT IS INSTALLED.

2. THROUGH PENETRANTS - ONE METALLIC PIPE, CONDUIT OR TUBING TO BE INSTALLED WITHIN THE FIRESTOP SYSTEM. THE SPACE BETWEEN PIPE, CONDUIT OR TUBING AND PERIPHERY OF OPENING SHALL BE A MIN 0 IN. (POINT CONTACT) TO A MAX 2 IN. PIPE, CONDUIT OR TUBING TO BE RIGIDLY SUPPORTED ON BOTH SIDES OF WALL ASSEMBLY. THE FOLLOWING TYPES AND SIZES OF METALLIC PIPES, CONDUITS OR TUBING MAY BE USED:
A. STEEL PIPE - NOM 12 IN. DIAM (OR SMALLER) SCHEDULE 5 (OR HEAVIER STEEL PIPE.
B. IRON PIPE - NOM 12 IN. DIAM (OR SMALLER) CAST OR DUCTILE IRON PIPE.
C. CONDUIT - NOM 4 IN. DIAM (OR SMALLER) ELECTRICAL METALLIC TUBING, NOM 6 IN. DIAM (OR SMALLER) STEEL CONDUIT OR NOM 1 IN. DIAM (OR SMALLER) FLEXIBLE STEEL CONDUIT.
D. COPPER TUBING - NOM 6 IN. DIAM (OR SMALLER) TYPE L (OR HEAVIER) COPPER TUBING.
E. COPPER PIPE - NOM 6 IN. DIAM (OR SMALLER) REGULAR (OR HEAVIER) COPPER PIPE.

3. FILL, VOID OR CAVITY MATERIAL* - CAULK - MIN 5/8 IN. THICKNESS OF FILL MATERIAL APPLIED WITHIN THE ANNULUS, FLUSH WITH BOTH SURFACES OF WALL. MIN 3/8 IN. DIAM BEAD OF FILL MATERIAL APPLIED AT POINT CONTACT LOCATION AT THE PENETRANT/GYPSUM BOARD INTERFACE ON BOTH SIDES OF WALL.

PENETRATIONS THROUGH STRUCTURE SHALL MAINTAIN FIRE RESISTANCE AND COMPLY WITH SECTION 713.4 OF THE IBC 2009. ALL ANNULAR SPACES BETWEEN RATED STRUCTURE/ENCLOSURE SHALL BE FILLED WITH APPROVED MATERIAL COMPLYING WITH REQUIREMENTS OF UL 1479.

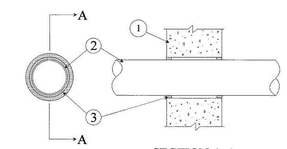

REINFORCED CONCRETE

F RATINGS - 2 HR
T RATING - 0 HR

NOTES:

1. WHERE CONDUITS PASS THROUGH MASONRY OR CONCRETE WALLS OR FLOORS, THE ELECTRICAL CONTRACTOR SHALL PROVIDE AND SET INDIVIDUAL GRC SLEEVES FOR EACH CONDUIT AND ALL OTHER WORK UNDER HIS CHARGE, AS NECESSARY FOR PASSAGE OF ALL RACEWAYS. SLEEVES SHALL BE OF SUFFICIENT SIZE TO PROVIDE 1/2" ANNULAR SPACE AROUND THE CONDUIT PASSING THROUGH THE FLOOR OR WALLS. ALL OPENINGS SHALL BE SEALED, MADE SMOKE RESISTANT, AND TIGHT BY JHH. THE CONTRACTOR SHALL BE RESPONSIBLE FOR THE EXACT LOCATION OF SLEEVES PROVIDED UNDER THIS CONTRACT AND SHALL COORDINATE ALL REQUIREMENTS FOR RACEWAY SLEEVES.

2. WALL ASSEMBLY - MIN 6 IN. (152 MM) THICK REINFORCED LIGHTWEIGHT OR NORMAL WEIGHT (100-150 PCF OR 1600-2400 KG/M3) CONCRETE. WALL MAY ALSO BE CONSTRUCTED OF ANY UL CLASSIFIED CONCRETE BLOCKS*. MAX DIAM OF OPENING IS 25 IN. (635 MM).

SEE CONCRETE BLOCKS (CAZT) CATEGORY IN THE FIRE RESISTANCE DIRECTORY FOR THE NAMES OF MANUFACTURERS.

3. THROUGH PENETRANT - ONE METALLIC PIPE, TUBING OR CONDUIT TO BE INSTALLED EITHER CONCENTRICALLY OR ECCENTRICALLY WITHIN THE FIRESTOP SYSTEM. THE ANNULAR SPACE BETWEEN PIPES, TUBING OR CONDUITS AND PERIPHERY OF OPENING IS DEPENDENT UPON THE TYPE AND MAX DIAM OF THE THROUGH PENETRANT AS TABULATED BELOW.

PIPE, TUBING OR CONDUIT TO BE RIGIDLY SUPPORTED ON BOTH SIDES OF WALL ASSEMBLY. THE FOLLOWING TYPES AND SIZES OF METALLIC PIPES, TUBING OR CONDUITS MAY BE USED:
A. STEEL PIPE - NOM 24 IN. (610 MM) DIAM (OR SMALLER) SCHEDULE 10 (OR HEAVIER) STEEL PIPE.
B. IRON PIPE - NOM 24 IN. (610 MM) DIAM (OR SMALLER) CAST OR DUCTILE IRON PIPE.
C. COPPER TUBING - NOM 6 IN. (152 MM) DIAM (OR SMALLER) TYPE L (OR HEAVIER) COPPER TUBING.
D. COPPER PIPE - NOM 6 IN. (152 MM) DIAM (OR SMALLER) REGULAR (OR HEAVIER) COPPER PIPE.
E. CONDUIT - NOM 4 IN. (102 MM) DIAM (OR SMALLER) STEEL ELECTRICAL METALLIC TUBING, NOM 6 IN. (152 MM) DIAM GALV STEEL CONDUIT OR NOM 1 IN. DIAM FLEXIBLE STEEL CONDUIT.

TYPE OF THROUGH PENETRANT	MAX DIAM OF THROUGH PENETRANT, IN. (MM)	ANNULAR SPACE, IN.
STEEL OR IRON PIPE	4 (102)	AS MENTIONED IN NOTE #1 ABOVE
STEEL TUBING OR CONDUIT	4 (102)	AS MENTIONED IN NOTE #1 ABOVE
STEEL CONDUIT	6 (152)	AS MENTIONED IN NOTE #1 ABOVE
STEEL OR IRON PIPE	24 (610)	AS MENTIONED IN NOTE #1 ABOVE
COPPER TUBING OR PIPE	6 (152)	AS MENTIONED IN NOTE #1 ABOVE

4. FILL, VOID OR CAVITY MATERIAL* - SEALANT - MIN 5/8 IN. (16 MM) THICKNESS OF FILL MATERIAL APPLIED WITHIN ANNULUS, FLUSH WITH BOTH SURFACES OF WALL. AT THE POINT CONTACT LOCATION BETWEEN THROUGH PENETRANT AND CONCRETE, A MIN 1/2 IN. DIAM BEAD OF FILL MATERIAL SHALL BE APPLIED AT THE CONCRETE/THROUGH PENETRANT INTERFACE ON BOTH SURFACES OF WALL.

PENETRATIONS THROUGH STRUCTURE SHALL MAINTAIN FIRE RESISTANCE AND COMPLY WITH SECTION 713.4 OF THE IBC 2009. ALL ANNULAR SPACES BETWEEN RATED STRUCTURE/ENCLOSURE SHALL BE FILLED WITH APPROVED MATERIAL COMPLYING WITH REQUIREMENTS OF UL 1479.

1 / E-7.1 THROUGH-PENETRATION FIRESTOP DETAIL

SCALE: NOT TO SCALE

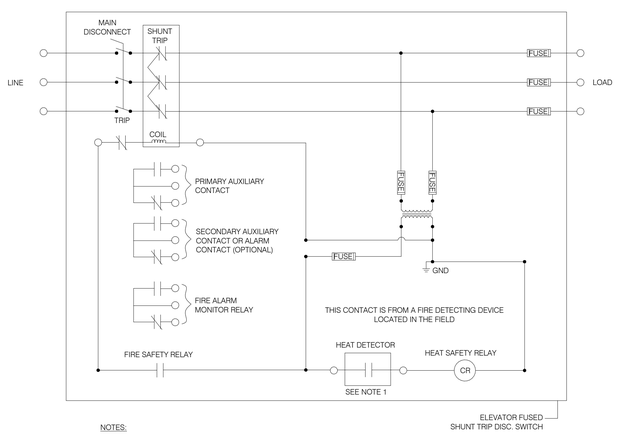

NOTES:
1. PLACE THE HEAT DETECTORS IN THE MACHINE ROOM. THE DETECTORS WILL BE CONNECTED DIRECTLY TO THE SHUNT TRIP DISCONNECT TO THE AFFECTED ELEVATOR. ACTIVATION OF THESE HEAT DETECTORS DISCONNECTS POWER TO THE AFFECTED ELEVATORS. (PER NEC620-51)
2. MOUNT HEAT DETECTORS 24" OF THE SPRINKLER HEAD.

6 / E-7.1 ELEVATOR FIRE SERVICE DISCONNECT WIRING DIAGRAM DETAIL

SCALE: NOT TO SCALE

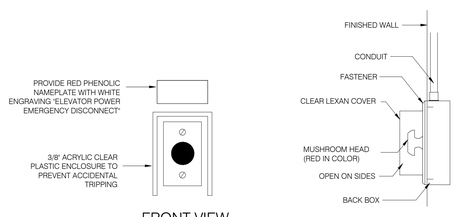

NOTE:
1. INSTALL A STOP SWITCH ADJACENT TO LIGHTING SWITCH AT THE ELEVATOR PIT

5 / E-7.1 ELEVATOR STOP SWITCH

SCALE: NOT TO SCALE

SETTY
ONE SOUTH STREET, SUITE 1110
BALTIMORE, MARYLAND 21202
TEL 667-329-8035
MAINTENANCE/ENERGY MANAGEMENT
ENERGY MANAGEMENT SERVICES - PROGRAM MANAGEMENT
CONSULTING ENGINEERS - MECHANICAL, ELECTRICAL
DISTRICT OF COLUMBIA - MARYLAND
www.SETTY.com
SAVOYYYYYYY

PROJECT NUMBER

11720 Beltsville Drive
Suite 600
Calverton, MD 20705
Tel: 301.595.1000
www.grimmandparker.com
GRIMM AND PARKER

GP# 21553

ELECTRICAL DETAILS

HOLABIRD ACADEMY PK-8
CITY OF BALTIMORE, MARYLAND

DATE	DESCRIPTION

E-7.1

03/13/2017
BID SET

© GRIMM AND PARKER, P.C. 2014